INSTALLATION INSTRUCTION MANUAL

SINGLE ENTRY DOOR FRAMESAVER™

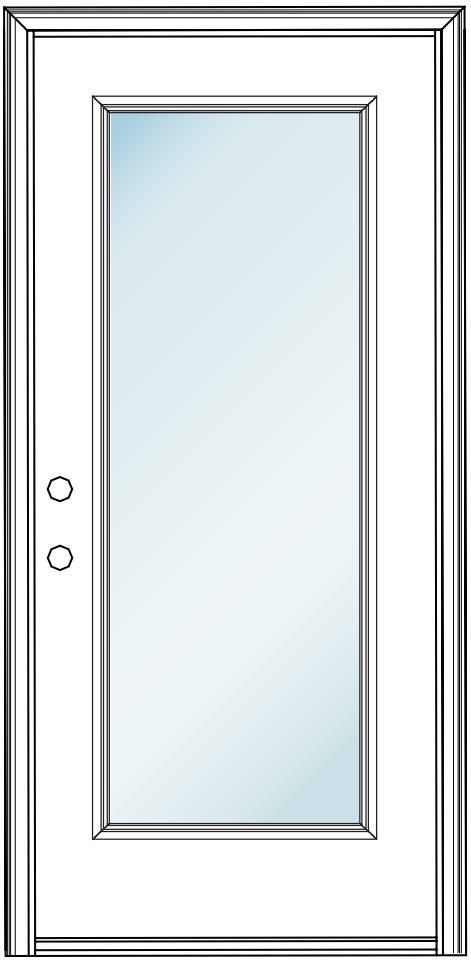

**** Find QR Codes inside for additional information, helpful installation tips, and videos.***

Contact the local recycling waste management center for waste disposal in the area. Always check local waste requirements and carefully dispose of waste in accordance with Federal and other regulations.

Homes built before 1978 may contain lead paint. All replacement installations must comply with the U.S. EPA's Lead-Based Paint Renovation, Repair, and Painting Program (RRP Rule). Read more about the RRP Rule and lead-safe work practices on the U.S. EPA's website at: www.epa.gov/lead

ProVia®
THE PROFESSIONAL WAY

GETTING STARTED

MATERIALS YOU WILL NEED

- (1) Box 3" Smooth Shank Exterior Screws
- High Quality Silicone Caulking in accordance with ASTM C920, Class 25 & Caulking Gun
- Shims
- AAMA approved Low-Expanding Window Insulation Foam in accordance with ASTM C1620

PROVIA INSTALLATION KITS AVAILABLE FOR ORDER

- **Installation Kit with Wood Shims (P-HW-ACCS00-80)**
  (26) #8 x 3" Galvanized Drywall Screws
  (1) Wood Shim Pack
  (1) Silirub® N1 100% Silicone
  (1) 1" x 3" x 20' Fiberglass Insulation
- **Installation Kit with Composite Shims (P-HW-ACCS00-81)**
  (26) #8 x 3" Galvanized Drywall Screws
  (14) Composite Shims
  (1) Silirub® N1 100% Silicone
  (1) 1" x 3" x 20' Fiberglass Insulation

REMEMBER: ALWAYS USE THE APPROPRIATE PERSONAL PROTECTIVE EQUIPMENT.

Read these instructions carefully before starting installation. Product warranty does not cover damages resulting from improper installation.

IMPORTANT NOTES BEFORE YOU BEGIN

- Inspect your package(s) for any visible damage to the product. In addition, double check your paperwork with label on product(s) and verify all information is a match. Open packaging to confirm style, color and that order was shipped complete. Double check size of new unit by comparing it for fit to opening.
- If damage or irregularities are found, please scan the product's packaging QR Code label using your phone's QR Code Scanner to access ProVia's After Sale Product Support to enter a request and post pictures/videos to the order, or you can call the Customer Support Team at 1-800-669-4711.
- If you have ordered optional items, verify that they are included in packaging contents. This includes checking for multiple packages (For example, 1 of 2 and 2 of 2).
- For the entry door measuring guide and video, please tap or scan the QR codes.

GUIDE VIDEO

⚠ IMPORTANT INFORMATION!

• ProVia® understands there are various methods and conditions affecting the installation of an entry door. We feel the most critical steps are plane adjustment, securing, and shimming as instructed in this document.

A. PREPARATION

CHECK WALL PLANE AND SUBFLOOR

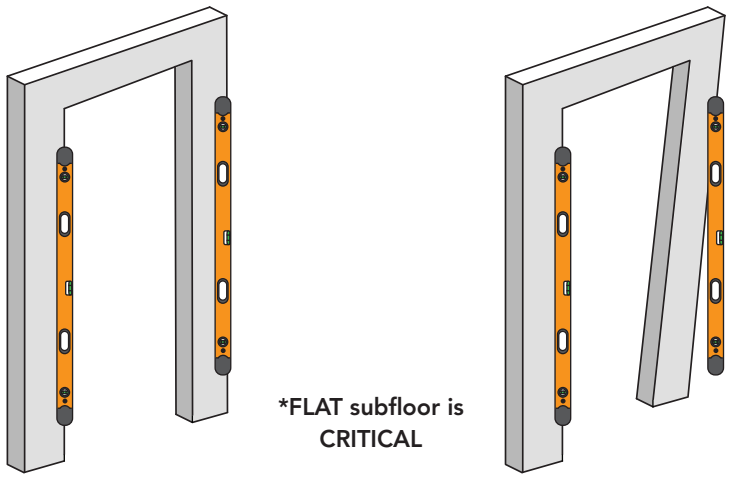

(Figure A.1)

1. Confirm unit size with the proposed opening.
2. Leave protective plastic bag on the door slab.
3. It is recommended to leave the pre-hang shipping bracket (if applicable) attached at strike location for installation assistance.
4. For units ordered with attached brickmold and cladding, remove the loose brickmold cladding. If unit was specifically ordered with jamb cladding as 'Ship Cladding Loose on Unit', remove all cladding at this time.
5. Remove shipping slats from bottom of threshold.
6. For units ordered as NO brickmold or brickmold loose, it is recommended to attach temporary cleats (small blocks of wood) to overlap the exterior of the frame, substituting for brickmold. This will provide plane adjustment points in Section B.
7. **For replacement applications**, remove existing door unit to expose rough opening. *Rough opening will be from jack stud to jack stud, and subfloor to underside of header.* Clean opening of all dirt, debris, and obstructions.
8. Check if the opposing wall framing is on the same plane. If not, the new unit will need to be adjusted to plane during installation. Each vertical side jamb of the unit should be equal and parallel to the other and cannot follow the wall framing if framing is out of plane. *(Figure A.1)*
9. Check subfloor for flat. NOW IS THE BEST TIME TO MAKE CORRECTIONS TO THE SUBFLOOR. Measure and check to be sure the new door slab will clear carpet, hardwood, rug, etc. Subfloor may need to be built up.
10. **Dry fit unit to confirm opening clearances, dust cup clearance, and plane of door unit.** Remove unit and make any necessary modifications to opening.

A. PREPARATION *(CONTINUED)*

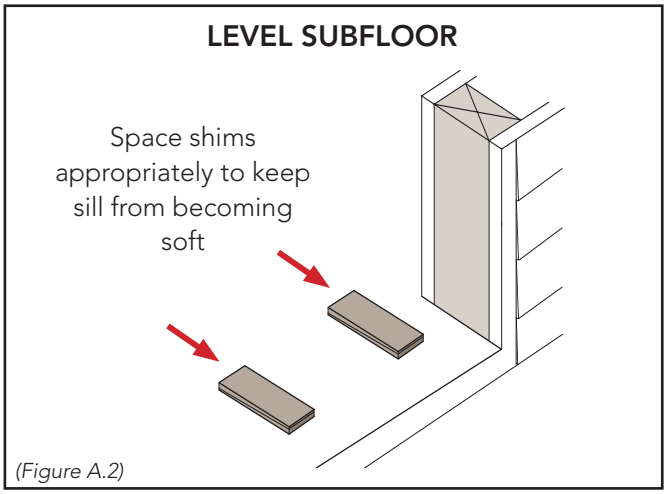

(Figure A.2)

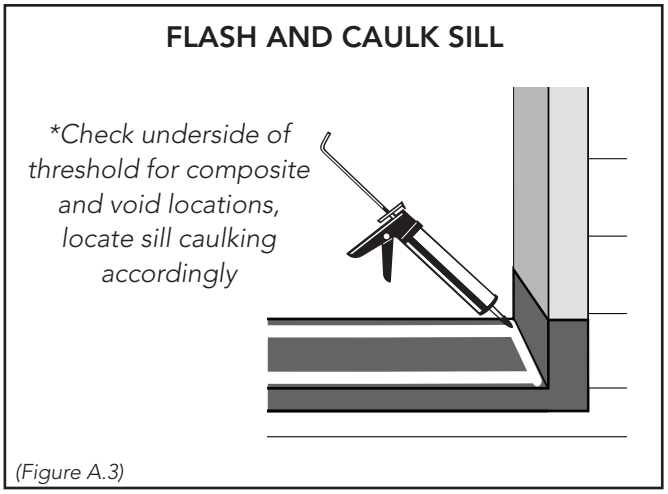

(Figure A.3)

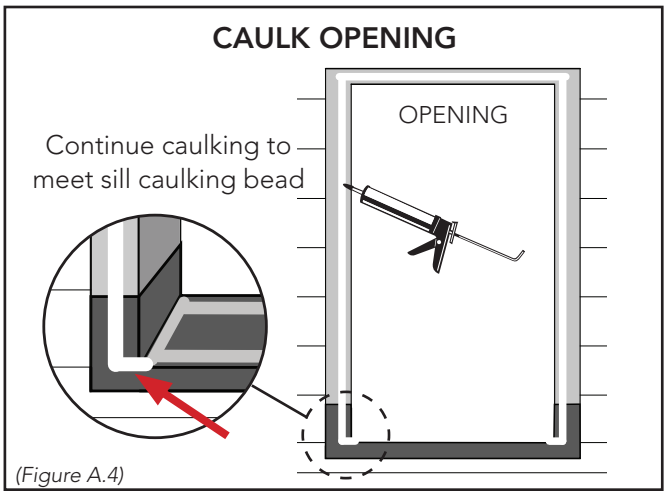

(Figure A.4)

11 Check to be sure the exterior threshold edge is fully supported. Support as needed.

***IMPORTANT!* A flat sill is critical. If sill is NOT flat and straight, it must be shimmed for proper operation of door. Be careful to NOT over shim. Improper shimming may change the margins and jeopardize door operation.**

12 Re-check sill for flat. If minor leveling and margin adjustments are needed (⅛" or less), place wood shims between subfloor and threshold. *(Figure A.2)*

13 Apply flashing to sill opening in accordance with local building codes and best practices. *(Figure A.3)*

14 Add or replace the drip cap at the top of the opening if necessary.

15 Apply (2) generous beads of premium caulking compound to sill flashing for the full LENGTH of opening. Check the underside of threshold to make sure caulking will contact threshold. Some thresholds have voids. At each end of opening, apply (1) caulking bead along the WIDTH of sill. *(Figure A.3)*

16 On the exterior sheathing or weather resistant barrier, apply a bead of caulking around perimeter of opening to seat brickmold (unit will be set in following Section). Continue bottom of each vertical bead to meet sill caulking for a complete seal. Units with brickmold shipped loose, do not apply caulking until ready for brickmold installation. *(Figure A.4)*

B. INSTALLATION

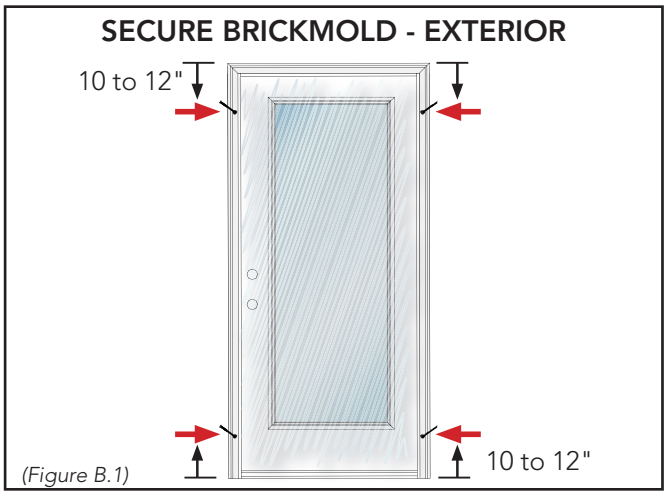

(Figure B.1)

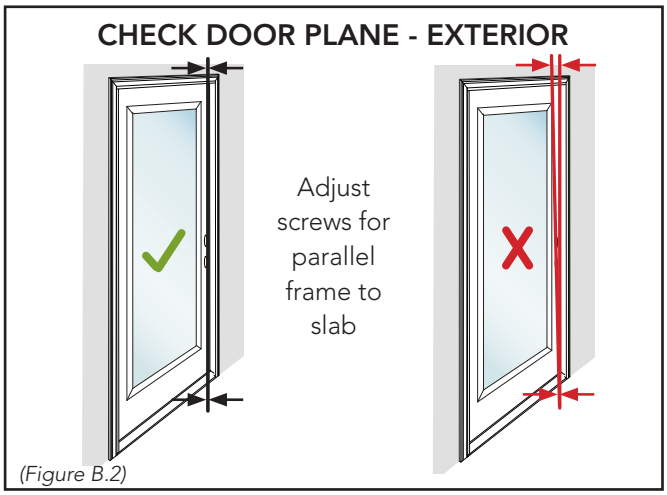

(Figure B.2)

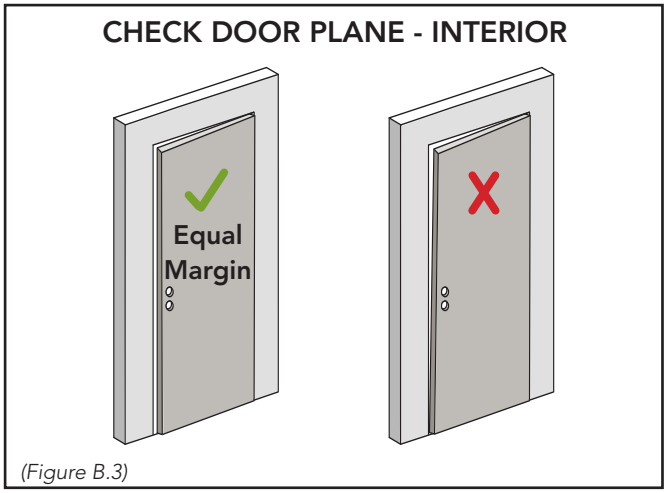

(Figure B.3)

1. Set new unit into opening with sill first. From the interior side, center door on existing base board or paint lines.

2. Install decking screws (not included) in each vertical brickmold, 10"-12" from the top and bottom. *Note, full-thread screws can be used in place of decking screws. (Figure B.1)*

3. ADJUST PLANE from the EXTERIOR. Check the plane between closed slab and frame. Use the (4) brickmold screws to adjust the frame until straight and parallel with slab. *(Figure B.2)*

⚠ ***IMPORTANT! Be careful with initial opening of door slab. Shipping brackets WILL DAMAGE JAMB if opened without lifting to un-weight.***

4. Remove jamb screws from shipping bracket. Before opening door, use handle set prepped holes to lift and un-weight door slab, then open. Remove bracket and discard.

5. Remove bag from door slab. Start at open end of bag, remove (1) hinge at a time to slide off.

6. From the INTERIOR, re-check the plane between slab and frame. Compare the edge of door slab to edge of strike jamb. Edges need to be parallel. If door is out of plane *(the slab and jamb edge are not parallel)*, use brickmold screws to adjust frame as required. *(Figure B.3)*

⚠ ***IMPORTANT! Plane adjustment is critical for operation and sealing. Plane needs to be monitored throughout installation. After all adjustments are made, confirm door is still in plane. Adjustments to plane after completing install may require removal and re-installation.***

B. INSTALLATION *(CONTINUED)*

CHECK SLAB TO FRAME MARGINS - INTERIOR

Achieve and maintain a **⅛" to 3⁄16" margin**, all corners

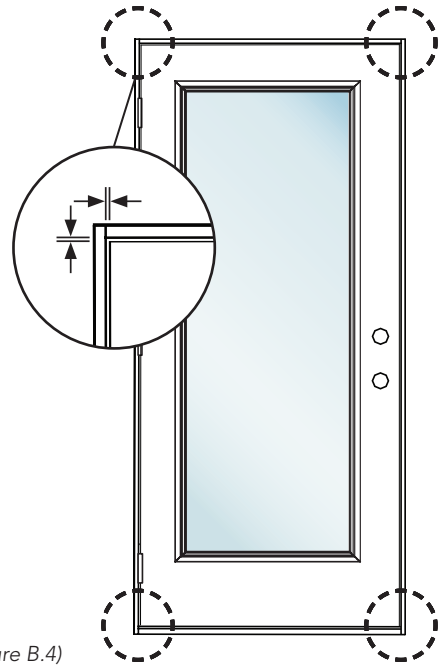

(Figure B.4)

SECURE AND SHIM JAMBS - INTERIOR

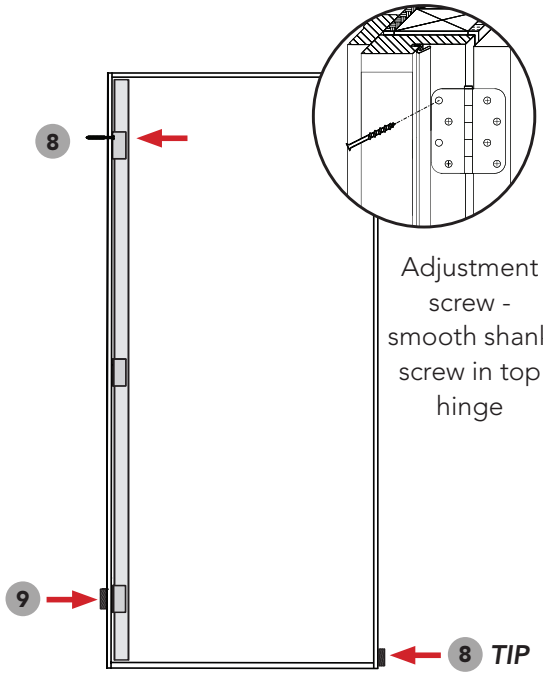

(Figure B.5)

7 Throughout installation, continuously monitor the slab to frame margin. Shims and screws must be installed and adjusted as instructed to achieve a ⅛" - 3⁄16" margin at all corners of door slab. *(Figure B.4)*

⚠ ***IMPORTANT! PRE-DRILL FRAME FOR ALL SCREWS TO BE INSTALLED. Use a ⅛" drill bit to protect frame from splitting.***

⚠ ***IMPORTANT! CORRECT** shimming application; stack wedge shaped shims contrasting and plane to plane. See diagram below. To avoid twisting the frame, **DO NOT** use a single wedge shim.*

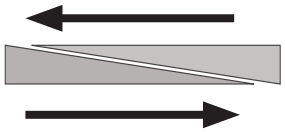

8 Install a smooth shank screw *(not provided)* into the top hinge to draw top of door slab toward the jamb. Use screw for adjustments. *(Figure B.5)*

***TIP:** To prevent the threshold from shifting, install shims next to threshold on the strike side. This will allow the bottom hinge side shims to shift the slab only.*

9 Install stacked shims behind the bottom hinge. Use the shims and the adjustment screw to set margins between the slab and jamb. *(Figure B.5)*

B. INSTALLATION *(CONTINUED)*

SECURE AND SHIM JAMBS - INTERIOR

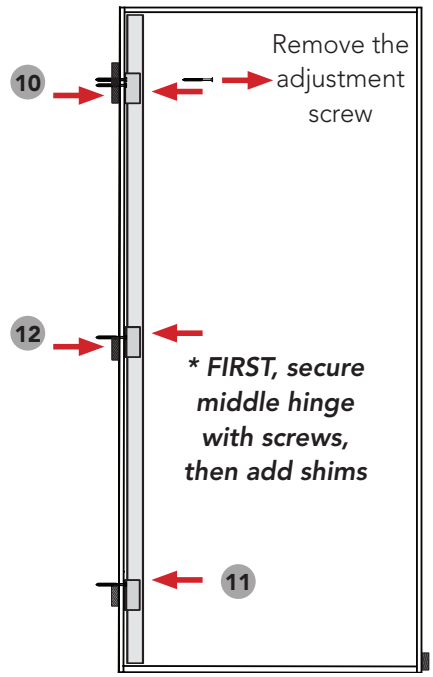

(Figure B.6)

SHIM HANDLE PREP LOCATION AND INSTALL STRIKE PLATES

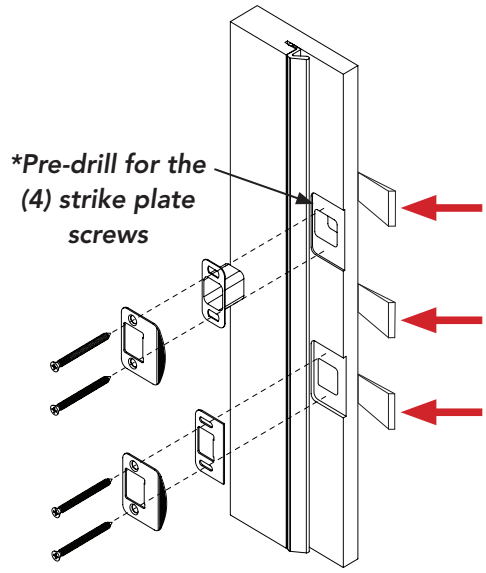

(Figure B.7)

10 Install shims behind top hinge until tight to the adjuster screw. Install a #10 x 2½" screw *(provided)* in the remaining open hinge hole then shim tight to screw. Remove the adjustment screw and replace with a #10 x 2½" screw. *(Figure B.6)*

NOTE: The #10 x 2½" hinge screws are included in the hardware box or stapled to the jamb side.
- For a 3-HINGE DOOR, (4) screws provided.
- For a 4-HINGE DOOR, (5) screws provided.

11 At bottom hinge, install a #10 x 2½" screw in open hole. *(Figure B.6)*

12 At middle hinge(s), install a #10 x 2½" screw in open hole(s). Snug up screw, **DO NOT OVER TIGHTEN**. Shim tight to screw(s). Monitor margins during adjustment. *(Figure B.6)*

13 Check corner margins and slab margins for parallel. *(Figure B.4)*

⚠ ***IMPORTANT! Be careful to NOT over shim. This may change margins and jeopardize operation.***

14 Shim directly above and below dead bolt prep location and directly behind lock set prep. Be sure to maintain a ⅛" - 3⁄16" margin. ***Note, for multi-point hardware, install shims and long installation screws at each strike plate location.***

⚠ ***IMPORTANT! PRE-DRILL FRAME FOR ALL STRIKE PLATE SCREWS TO BE INSTALLED. Use a ⅛" drill bit to protect frame from splitting.***

15 Insert dust cup then secure deadbolt and lock set strike plates with the #8 x 2½" *(provided)* screws. *All screws are included in the hardware box or stapled to jamb side. (Figure B.7)*

16 Install door hardware per manufacturer's included instruction.

B. INSTALLATION *(CONTINUED)*

SHIM AND SECURE ADDITIONAL - INTERIOR

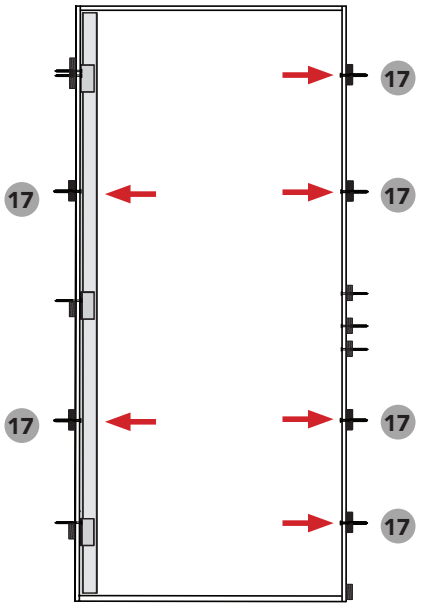

(Figure B.8)

SECURE BRICKMOLD - EXTERIOR

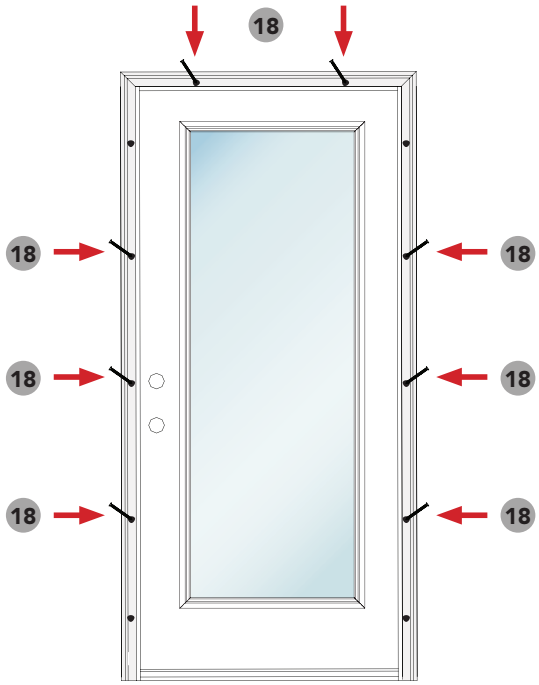

(Figure B.9)

17 Final check on all margins. Adjust shims and screws to achieve and maintain a 1/8" - 3/16" margin around entire door. Shim and secure additional areas of the jamb to achieve and maintain margins. Refer to Troubleshooting Section if needed. *(Figure B.8)*

⚠ ***IMPORTANT! Locate additional installation screws behind weather strip for a clean, professional appearance.***

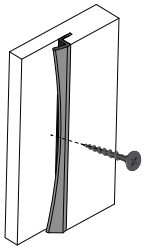

18 Install (3) screws in each vertical brickmold and (2 to 3) in the header brickmold. *(Figure B.9)*

C. SEAL CLADDING AND INSULATE

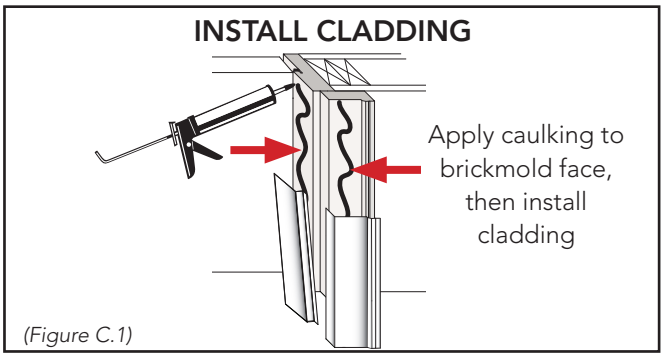

(Figure C.1)

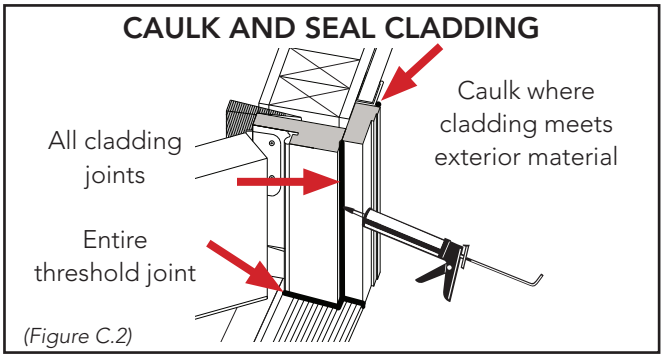

(Figure C.2)

1. Apply caulking to the brickmold face in order to adhere cladding. Repeat for the jamb cladding if applicable. Install all cladding. (*Figure C.1)*

2. Caulk along the entire threshold joint, where the jamb and brickmold meet the threshold. *(Figure C.2)*

3. Caulk around ALL cladding joints. Be sure to apply caulking around perimeter where cladding meets exterior sheathing/material. *(Figure C.2)*

4. Insulate with an AAMA approved ASTM C1620 low-expanding foam between frame and opening. ***Over use may cause frame to bow, jeopardizing door operation.***

D. THRESHOLD: Z-AC™ (AUTO-ADJUST) THRESHOLD ONLY

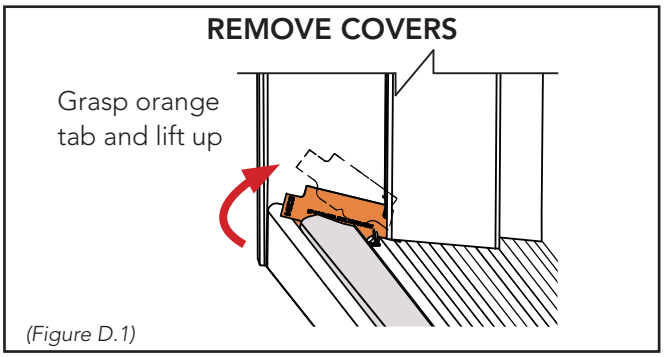

(Figure D.1)

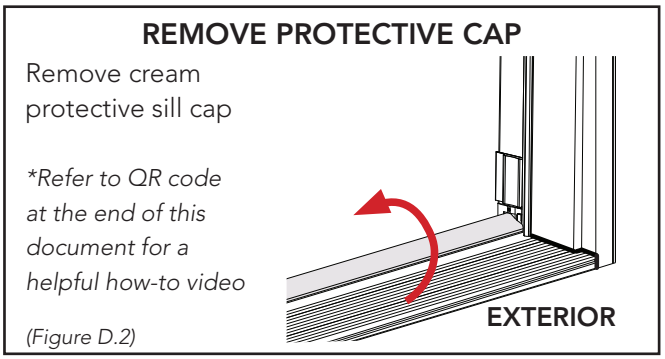

(Figure D.2)

1. Remove the orange protective covers located at each jamb. Grasp tab on the orange protective cover, marked 'Pull-Up'. Gently and slowly, lift up and away from the sill base *(pliers may be required)*. **DO NOT** remove any portion of foam gasket during removal of the orange tab. *Note, a small portion of the outside gasket edge will be removed with protective cover, this is typical. (Figure D.1)*

2. Remove the cream protective sill cap cover. For inswing door units, grasp cover from the exterior side, lift and roll toward the interior. The cap cover may break, this is typical. *(Figure D.2)*

E. THRESHOLD: ZAI (ADJUSTABLE) THRESHOLD ONLY

The ZAI (Adjustable) threshold allows for adjustment of the sill height, thus providing a consistent and even seal. To adjust sill cap height, follow one of the two methods shown below:

(A) REMOVE THRESHOLD CAP PLUGS

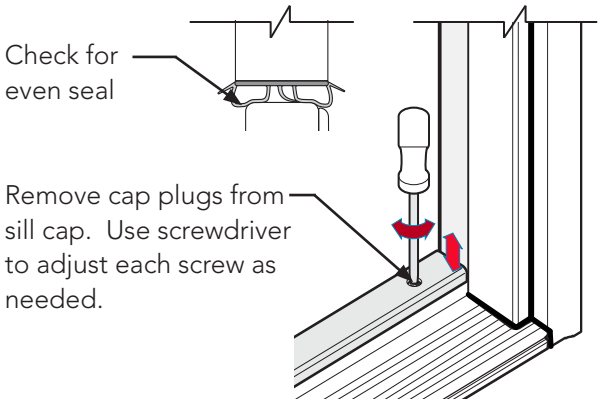

(Figure E.1)

OR

(B) REMOVE THRESHOLD SILL CAP

Using a flat head screwdriver or pry bar, pry up the sill cap, removing from channel

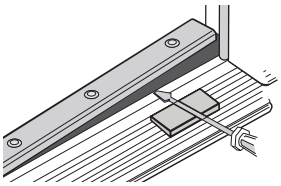

Loosen adjustment screws from underside of sill cap

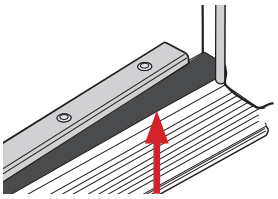

(Figure E.2)

(A) REMOVE CAP PLUGS ONLY:

A.1 Place tape around the cap plugs to protect finish. Use a flat blade to pry the plugs away from cap.

A.2 Use a screwdriver to adjust each screw as needed to achieve necessary height. *(Figure E.1)*

A.3 Open and close door to check adjustments.

A.4 Check for an even seal along full length of door sweep. Repeat process until proper seal is achieved. *(Figure E.1)*

A.5 Re-install the cap plugs. Use a rubber mallet if needed to secure plugs in place.
If cap plugs are damaged during adjustment, replace with new plugs.

(B) REMOVE SILL CAP ONLY:

B.1 **DO NOT REMOVE CAP PLUGS.**
Place a small piece of wood blocking on sill deck to prevent damage. At one end of the sill, use a flat head screwdriver or pry bar to pry sill cap upward and away from the sill channel. Continue to work for the full length of threshold until fully removed from channel. *(Figure E.2)*

B.2 Access adjustment screws from underside of the sill cap. Using a screwdriver, adjust screws as needed to achieve necessary height. *(Figure E.2)*

B.3 Re-install sill cap by snapping into channel. If needed, use a rubber mallet to tap into place. Leg of sill cap should touch the threshold deck when properly seated.

B.4 Open and close door to check adjustments.

B.5 Check for an even seal along full length of door sweep. Repeat above steps until proper seal is achieved.

TROUBLESHOOTING & TIPS

PROBLEM	CAUSE	SOLUTION
Door slab is not sealing against weatherstrip and/or strike-side, top of door slab protrudes past frame	Door slab is out of plane with frame.	1. Shift strike-side bottom corner of frame towards exterior. 2. Shift hinge-side top corner of frame towards exterior.
Door slab is not sealing against weatherstrip and/or strike side, bottom of door slab protrudes past frame	Door slab is out of plane with frame.	1. Shift strike-side top corner of frame towards exterior. 2. Shift hinge-side bottom corner of frame towards exterior. **Tip: If ordered with brickmold attached, using full-thread screws will allow the frame to be 'held' out from exterior sheathing in order to adjust plane.*
Strike-side margin is too small, door slab hits frame on strike-side	Over-shimmed.	1. Slightly loosen hinge-side shims and pull hinge-side frame towards stud by tightening hinge screws. 2. Loosen strike-side shims and pull strike-side frame towards stud by tightening screws behind weatherstripping. 3. Reduce shims from middle hinge (middle hinge over-shimmed).
Strike-side margin is too large (more than 3⁄16")	Under-shimmed.	1. Increase shim depth behind jamb on hinge-side. 2. Increase shim depth behind jamb on strike-side.
Header margin is tapered, margin is larger on strike-side	1. Not properly shimmed behind hinges. 2. Sill is not level.	1. Adjust shims behind top and bottom hinges to correct tension and/or compression. 2. Shim directly under jamb on the hinge-side to raise door slab within the frame, 1⁄8" max.
Header margin is tapered, margin is smaller on strike-side	1. Not properly shimmed behind hinges. 2. Sill is not level.	1. Adjust shims behind top and bottom hinges to correct tension and/or compression. 2. Shim directly under jamb on the strike-side to raise the jamb to create proper margin, 1⁄8" max.
Tapered margin above top hinge, margin is larger at the hinge	Under shimmed at middle and top hinge.	Increase shims behind top and/or middle hinge.
Tapered margin above top hinge, margin is smaller at the hinge	Over shimmed at middle or top hinge.	Decrease shims behind top and/or middle hinge.
Tapered margin below bottom hinge, margin is larger at the hinge	Under shimmed at middle and bottom hinge.	Increase shims behind bottom and/or middle hinge.
Tapered margin below bottom hinge, margin is smaller at the hinge	Over shimmed at middle or bottom hinge.	Decrease shims behind bottom and/or middle hinge.
Middle strike-side margin is too small or too large above or below latch area	Wood frame is bowed.	Secure additional shims behind weatherstripping at affected area.

TROUBLESHOOTING & TIPS

PROBLEM	CAUSE	SOLUTION
Door slab is in plane, but is not sealing tight against weatherstrip	Adjustable strike plate has moved.	Remove strike plate cover. Shift adjustable strike plate to proper position and secure in place with (2) small brad nails. Reinstall strike plate cover.
Door knob is loose	Screws have loosened from use.	1. Apply threadlocker. 2. Install a small lock washer behind each screw.
Bottom door sweep is dragging	1. Top margin is larger on strike-side. See Solution 1 & 2. 2. Bow (upward) in sill/threshold. See Solution 3.	1. Tighten top hinge screw to pull door slab up and towards frame. 2. If margin is ¼" or greater, door unit needs reset. Shim under sill and reset door. 3. Remove sill cap from threshold. Install screws through sill cap channel to pull threshold and sill downward. If this does not correct bow in threshold, removal of subfloor material will be required to level and reset door.
Bottom door sweep is not sealing	1. ZAI sill cap is too low. 2. Top margin is smaller on the strike-side. 3. Bow (downward) in sill threshold.	1. Raise adjustable sill cap as needed. See page 9. 2. Top hinge is over shimmed. Adjust shims as needed. 3. Door unit needs reset. Shim under sill as needed to raise bow. Reset door.

Please call Customer Support for additional installation inquiries at 1-800-669-4711.

FOR ADDITIONAL INFORMATION AND HELPFUL VIDEOS, SCAN OR TAP THE QR CODES:

INSTALLATION SUPPORT HOMEPAGE (Access to all our instructions and how to videos)

CRITICAL STEPS VIDEO: Single Entry Door Installation

VIDEO: ZAC Threshold Prep

Condensation, Humidity, and Dew Point

Installation Instruction Shipped Loose Brickmold Cladding

How to Fix a Squeaky Sweep (Slider Slicker)

Version 6.8 · 07.18.2025 · © 2025 ProVia · P-MK-61005-13

ProVia THE PROFESSIONAL WAY

2150 State Route 39, Sugarcreek, OH 44681
Phone: 330.852.4711 • Fax: 877.735.2057
provia.com